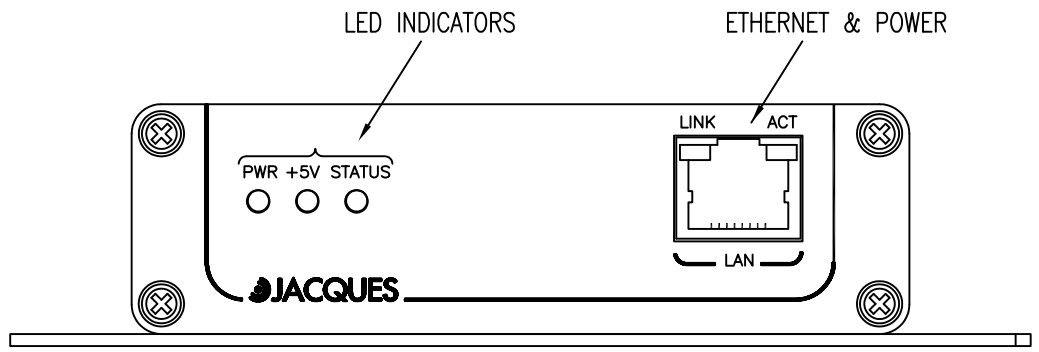

FRONT PANEL

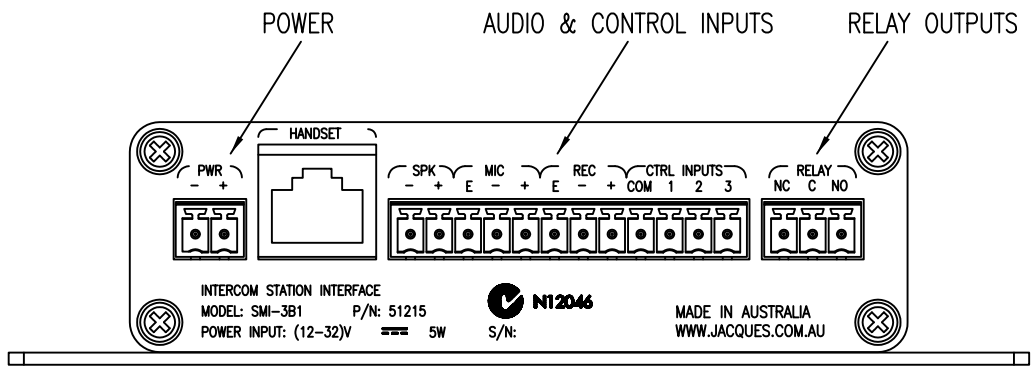

REAR PANEL

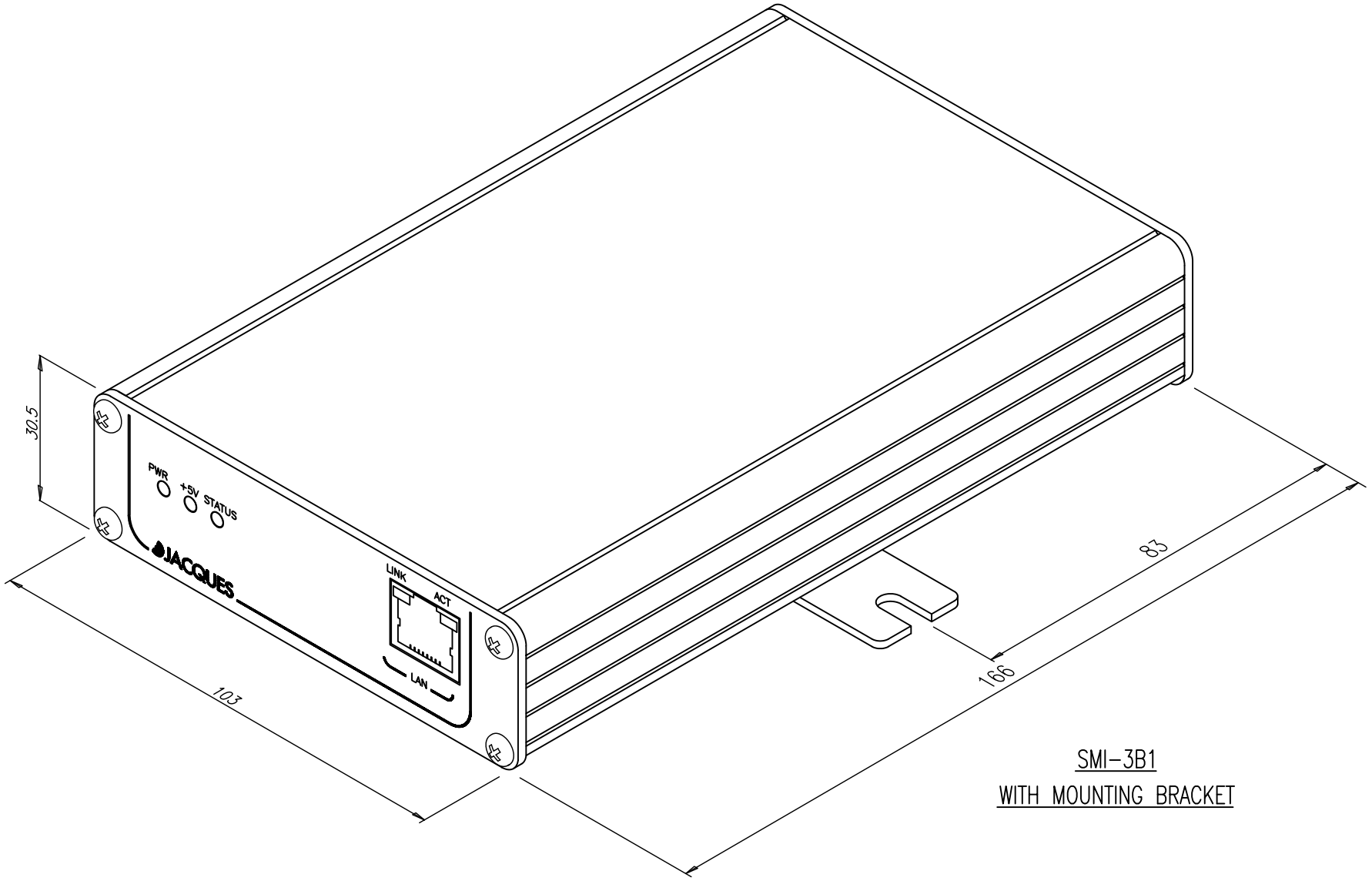

SMI-3B1
WITH MOUNTING BRACKET

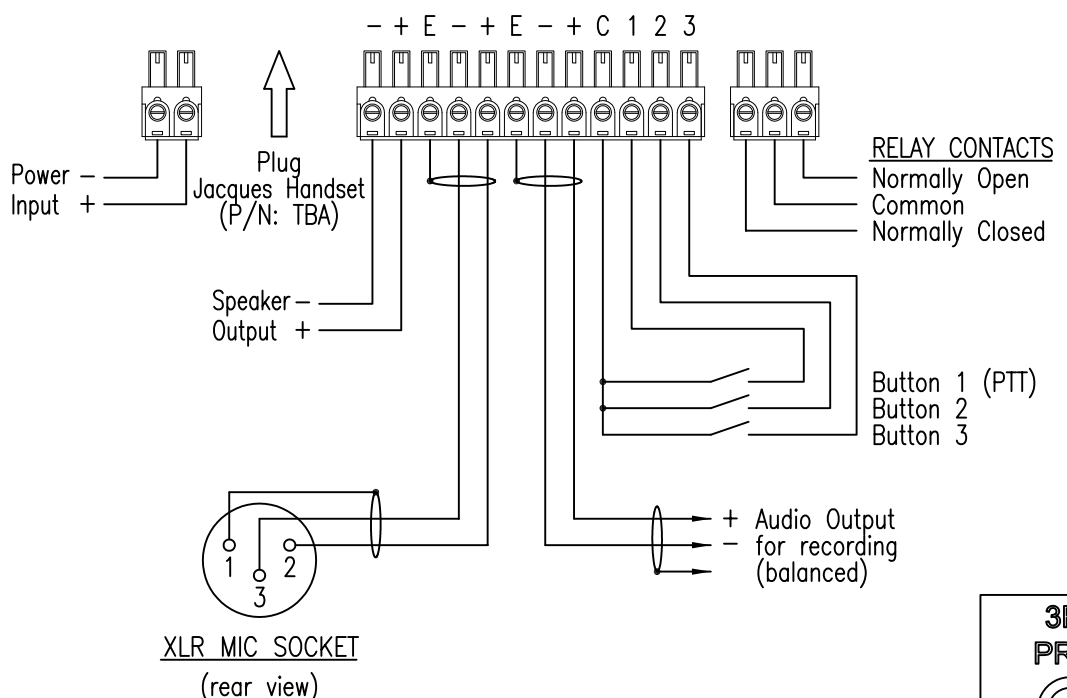

TERMINATION DETAILS

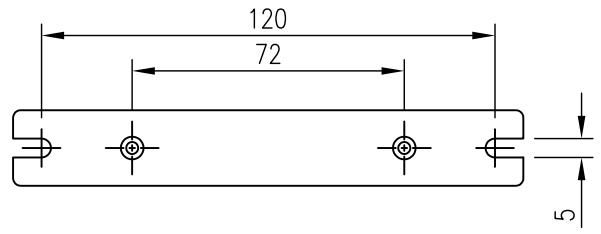

MOUNTING BRACKET DETAIL

NOTES:

1. Power Input is (12–32) V d.c./5 W.
2. Maximum output power is 1.5 W (into 4 ohm speaker).
3. REC (–,+) output is electronically balanced type, a.c. coupled.
4. Use REC (E,+) for single ended recording connection.
5. REC output level is 9 Vpp (balanced) maximum.
6. Relay contacts are rated at 30 V / 1 A maximum.
7. Power plug connector type is Phoenix MC 1,5/2–ST–3,81 or similar.
8. Audio/Control Inputs plug connector type is Phoenix MC 1,5/12–ST–3,81 or similar.
9. Relay plug connector type is Phoenix MC 1,5/3–ST–3,81 or similar.
10. The device can be powered via either a power plug at the rear panel
11. or Ethernet/Power (PoE) RJ–45 connector at the front panel.

©JACQUES ELECTRONICS PTY LTD 2008

3RD ANGLE PROJECTION

UNLESS OTHERWISE SPECIFIED:
DIMENSIONS ARE IN MILLIMETRES
TOLERANCES
DECIMALS DIAS ± 0.05
.X ± 0.4
.XX ± 0.15 ANGULAR ± 0.5°

FIRST USE & REVISION NOTES	DATE	INIT
1.		

JACQUES ELECTRONICS

SMI-3B1 INTERCOM STATION INTERFACE
INSTALLATION DETAILS

SIZE	ADAPTED FROM	REVISION	SCALE
A3	51173 INS	0	NTS
DATE 01/02/2008	DRAWN: L.F.Buchly CHECKED:		SHEET 1 OF 1

PART No. 51215 INS–0